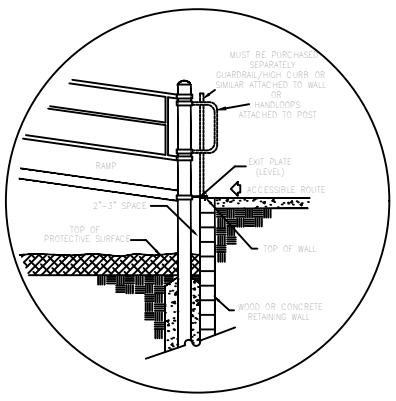

SUGGESTED ELEVATED RAMP EXIT INSTALLATION
RAMP ELEVATION TO BE 0" ABOVE FINISH GRADE.

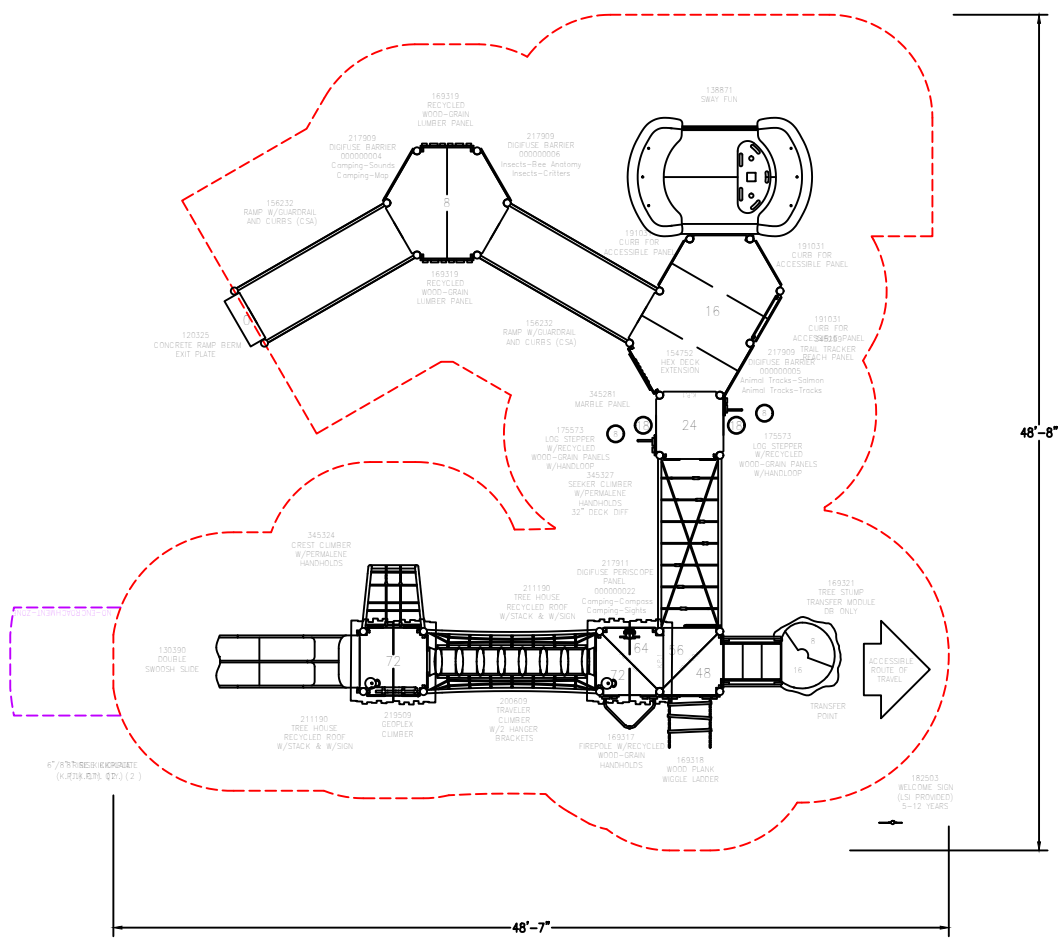

PlayBooster®
(5-12 years)
Max Fall Height: 110 inches

landscape structures

THIS PLAY AREA & PLAY EQUIPMENT IS DESIGNED FOR AGES 5-12 YEARS UNLESS OTHERWISE NOTED ON PLAN.

THIS CONCEPTUAL PLAN WAS BASED ON INFORMATION AVAILABLE TO LSI PRIOR TO CONSTRUCTION. DETAILED SITE INFORMATION INCLUDING SITE DIMENSIONS, TOPOGRAPHY, EXISTING UTILITIES, SOIL CONDITIONS, AND DRAINAGE SOLUTIONS SHOULD BE OBTAINED, EVALUATED, & UTILIZED IN THE FINAL DESIGN. PLEASE VERIFY ALL DIMENSIONS OF PLAY AREA, SIZE, ORIENTATION, AND LOCATION OF ALL EXISTING UTILITIES, EQUIPMENT, AND SITE FURNISHINGS PRIOR TO ORDERING. SLIDES SHOULD NOT FACE THE HOT AFTERNOON SUN.

CHOOSE A PROTECTIVE SURFACING MATERIAL THAT HAS A CRITICAL HEIGHT VALUE TO MEET THE MAXIMUM FALL HEIGHT FOR THE EQUIPMENT (REF. ASTM F1487 STANDARD CONSUMER SAFETY PERFORMANCE SPECIFICATION FOR PLAYGROUND EQUIPMENT FOR PUBLIC USE, SECTION 9 CURRENT REVISION). THE SUBSURFACE MUST BE WELL DRAINED. IF THE SOIL DOES NOT DRAIN NATURALLY IT MUST BE TILED OR SLOPED 1/8" TO 1/4" PER FOOT TO A STORM SEWER OR A "FRENCH DRAIN".

DESIGNED BY:

COPYRIGHT:
LANDSCAPE STRUCTURES, INC.
601 7th STREET SOUTH – P.O. BOX 198
DELANO, MINNESOTA 55328
PH: 1-800-328-0035 FAX: 1-763-972-6037

Date	Previous Drawing #	Initials

SCALE: IN FEET 0 1 5 10'
SCALE: IN METERS 0.0M 1.0M 2.0M 4.0M

Purden
Provincial Park

Landscape
Structures

SYSTEM TYPE:
PlayBooster

DRAWING #:
1158144-01-01