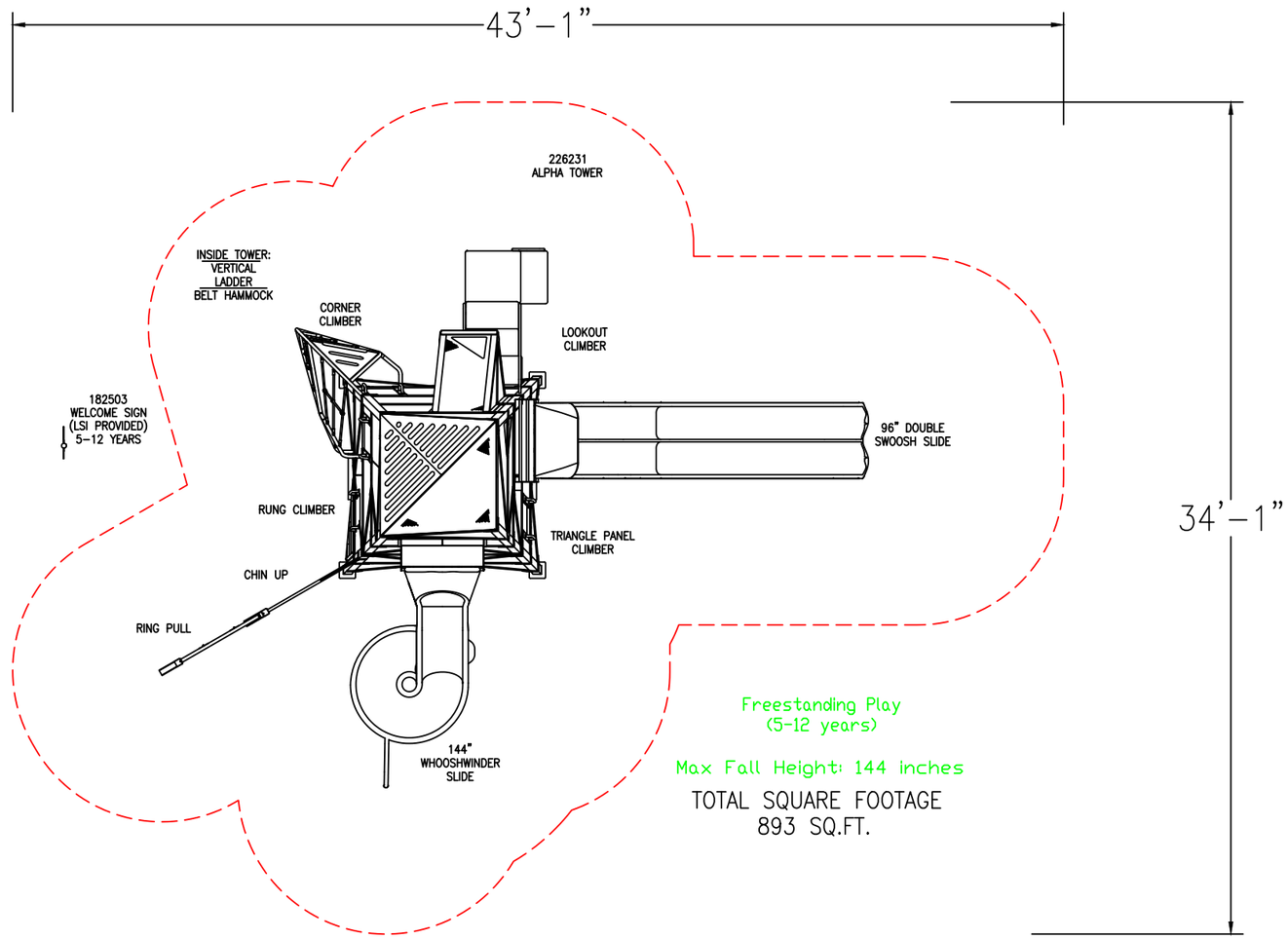

TOTAL ELEVATED PLAY COMPONENTS	7		
TOTAL ELEVATED COMPONENTS ACCESSIBLE BY RAMP	0	REQUIRED	0
TOTAL ELEVATED COMPONENTS ACCESSIBLE BY TRANSFER	4	REQUIRED	4
TOTAL ACCESSIBLE GROUND LEVEL COMPONENTS SHOWN	3	REQUIRED	2
TOTAL DIFFERENT TYPES OF GROUND LEVEL COMPONENTS	2	REQUIRED	2

landscape structures

IPEMA CERTIFIED ASTM F1487

The play components identified on this plan are IPEMA certified. (Unless model number is preceded with *) The use and layout of these components conform to the requirements of ASTM F1487. To verify product certification, visit www.ipema.org

THIS PLAY AREA & PLAY EQUIPMENT IS DESIGNED FOR AGES 5-12 YEARS UNLESS OTHERWISE NOTED ON PLAN.

IT IS THE MANUFACTURERS OPINION THAT THIS PLAY AREA DOES CONFORM TO THE A.D.A. ACCESSIBILITY STANDARDS, ASSUMING AN ACCESSIBLE PROTECTIVE SURFACING IS PROVIDED, AS INDICATED, OR WITHIN THE ENTIRE USE ZONE.

THIS CONCEPTUAL PLAN WAS BASED ON INFORMATION AVAILABLE TO US. PRIOR TO CONSTRUCTION, DETAILED SITE INFORMATION INCLUDING SITE DIMENSIONS, TOPOGRAPHY EXISTING UTILITIES, SOIL CONDITIONS, AND DRAINAGE SOLUTIONS SHOULD BE OBTAINED, EVALUATED, & UTILIZED IN THE FINAL DESIGN. PLEASE VERIFY ALL DIMENSIONS OF PLAY AREA, SIZE, ORIENTATION, AND LOCATION OF ALL EXISTING UTILITIES, EQUIPMENT, AND SITE FURNISHINGS PRIOR TO ORDERING. SLIDES SHOULD NOT FACE THE HOT AFTERNOON SUN.

CHOOSE A PROTECTIVE SURFACING MATERIAL THAT HAS A CRITICAL HEIGHT VALUE TO MEET THE MAXIMUM FALL HEIGHT FOR THE EQUIPMENT (REF. ASTM F1487 STANDARD CONSUMER SAFETY PERFORMANCE SPECIFICATION FOR PLAYGROUND EQUIPMENT FOR PUBLIC USE, SECTION 8 CURRENT REVISION). THE SUBSURFACE MUST BE WELL DRAINED. IF THE SOIL DOES NOT DRAIN NATURALLY IT MUST BE TILED OR SLOPED 1/8" TO 1/4" PER FOOT TO A STORM SEWER OR A "FRENCH DRAIN".

DESIGNED BY:

COPYRIGHT: 2/20/19
LANDSCAPE STRUCTURES, INC.
601 7th STREET SOUTH - P.O. BOX 198
DELANO, MINNESOTA 55328
PH: 1-800-328-0035 FAX: 1-763-972-6091

Date	Previous Drawing #	Initials

SCALE: IN FEET
0' 1' 5' 10'

Design
6085

Landscape
Structures

SYSTEM TYPE:
Freestanding

DRAWING #:
6085

ISO 14001:2015 BE TIPLE

ISO 9001:2015 Certified